PROJECT	:	CA-251836 - Stevenage Water Flow Meter
PROJECT TITLE	:	STEVENAGE WATER FLOW METER
DRAWING NO.	:	CA-251836
CLIENT	:	ENERTHERM ENGINEERING
CLIENT ADDRESS	:	ALLIA FUTURE BUSINESS PARK PUFC PE2 8AN
SITE ADDRESS	:	EUROPE SNACKS STEVENAGE
PANEL NUMBER	:	ENC03
PANEL TITLE	:	WATER METER DATA COLLECTION PANEL
SERIAL NUMBER	:	Panel Serial

SPECIFICATION

NOMINAL VOLTAGE	:	230V AC
NOMINAL CONTROL VOLTAGE	:	24V DC
NOMINAL POWER	:	140W
NOMINAL WEIGHT	:	32Kg
NOMINAL HEAT DISSIPATION	:	33W

CABLE COLOUR KEY

POWER	:	BLACK
NEUTRAL	:	LIGHT BLUE
AC CONTROL VOLTAGE	:	RED
DC CONTROL	:	DARK BLUE
EXTERNAL	:	ORANGE
SIGNAL	:	WHITE

Rev:	Description:	Drawn by:	Apprvd by:	Date:

AJS CONTROL & AUTOMATION
Innovation House
6 Cibus Way
Holbeach, PE12 7FH
Phone: 01406 424954
Email: info@ajsspalding.co.uk

Site: EUROPE SNACKS STEVENAGE
Client: ENERTHERM ENGINEERING
Address: ALLIA FUTURE BUSINESS PARK PUFC PE2 8AN

Project: STEVENAGE WATER FLOW METER
Panel Title: WATER METER DATA COLLECTION PANEL
Panel ID: ENC03
Drawing type: Title page / cover sheet
Description: Cover Page

Job / Drawing No:	Panel Ref:	Sheet:	Revision:
CA-251836	03	A1	

Page: &EAA+ENC03/A1 Next: B1

Table of contents

Column X: An automatically generated page was edited

Page	Page description	Date	Edited by	X	Page	Page description	Date	Edited by	X
&EAA+ENC03/A1	Cover Page	28/11/2025	KJ						
&EAA+ENC03/B1	Index	28/11/2025	KJ						
&EAA+ENC03/C1	Structure Overview	28/11/2025	KJ						
&EAA+ENC03/D1	Parts List	28/11/2025	KJ						
&EAA+ENC03/E1	Terminal Diagram	28/11/2025	KJ						
&EAA+ENC03/E2	Terminal Diagram	28/11/2025	KJ						
&EED+ENC03/01	3D Model	28/11/2025	KJ						
&EED+ENC03/02	Door Layout	28/11/2025	KJ						
&EED+ENC03/03	Back Plate View	28/11/2025	KJ						
&EED+ENC03/05	LeftFront view	28/11/2025	KJ						
&EFS+ENC03/01	INCOMMING SUPPLY	28/11/2025	KJ						
&EFS+ENC03/05	24V PSU	28/11/2025	KJ						
&EFS+ENC03/50	NETWORK SWITCH	28/11/2025	KJ						
&EFS+ENC03/55	PLC	28/11/2025	KJ						
&EFS+ENC03/70	WATER METER	28/11/2025	KJ						
&EFS+ENC03/100	ENC03 PROFINET NETWORK	28/11/2025	KJ						
&EFZ+ENC03/01	RACK 2 SLOT 1	28/11/2025	KJ						

Rev:	Description:	Drawn by:	Apprvd by:	Date:

AJS CONTROL & AUTOMATION

Innovation House
6 Cibus Way
Holbeach, PE12 7FH
Phone: 01406 424954
Email: info@ajsspalding.co.uk

Site: EUROPE SNACKS STEVENAGE
Client: ENERTHERM ENGINEERING
Address: ALLIA FUTURE BUSINESS PARK PUFC PE2 8AN

Project: STEVENAGE WATER FLOW METER
Panel Title: WATER METER DATA COLLECTION PANEL
Panel ID: ENC03
Drawing type: Table of contents
Description: Index

Job / Drawing No:	Panel Ref:	Sheet:	Revision:
CA-251836	03	B1	

Page: &EAA+ENC03/B1 **Next:** C1

Structure identifier overview

F24_001

Full designation	Labeling	Structure description	Full designation	Labeling	Structure description
+DB	Location designation	LOCAL MCB DISTRIBUTION BOARD			
+ENC01	Location designation	MAIN CONTROL PANEL WITH HMI			
+ENC03	Location designation	WATER METER DATA COLLECTION PANEL			
+FLD	Location designation	FIELD DEVICE			

Rev:	Description:	Drawn by:	Apprvd by:	Date:

AJS CONTROL & AUTOMATION
Innovation House
6 Cibus Way
Holbeach, PE12 7FH
Phone: 01406 424954
Email: info@ajsspalding.co.uk

Site: EUROPE SNACKS STEVENAGE
Client: ENERTHERM ENGINEERING
Address: ALLIA FUTURE BUSINESS PARK PUFC PE2 8AN

Project: STEVENAGE WATER FLOW METER
Panel Title: WATER METER DATA COLLECTION PANEL
Panel ID: ENC03
Drawing type: Structure identifier overview
Description: Structure Overview

Job / Drawing No:	Panel Ref:	Sheet:	Revision:
CA-251836	03	C1	

Page: &EAA+ENC03/C1 **Next:** D1

Parts list

Device tag	Qty	Manufacturer	Part numbers	Description	Device tag	Qty	Manufacturer	Part number	Description
50XF01	1	Advantech	EKI-2725F-AE	Unmanaged Ethernet Switch, 4FE + 1G					
100KE01	1	Advantech	SFP-FMM-2K	SFP Fiberoptic Fast-ETHERNET Transceiver					
01XD01	1	Phoenix Contact	804063	Socket					
XD1	1	Phoenix Contact	807575	Carrier for marking accessories					
XD4	1	Phoenix Contact	807575	Carrier for marking accessories					
XE1	1	Phoenix Contact	1091671	Distribution block, PTFIX 6/12X2,5 GNYE					
05FB01	1	Phoenix Contact	2908262	Electronic circuit breaker, Single-channel, 1-8A					
XD1	1	Phoenix Contact	3022218	End clamp					
XD4	1	Phoenix Contact	3022218	End clamp					
XD1	1	Phoenix Contact	3022276	End clamp					
XD4	1	Phoenix Contact	3022276	End clamp					
XD4	1	Phoenix Contact	3030417	End cover					
XD4	2	Phoenix Contact	3209510	Feed-through terminal block					
XD4	1	Phoenix Contact	3209536	Ground modular terminal block					
XD1	1	Phoenix Contact	3212057	End cover					
XD1	1	Phoenix Contact	3212131	Ground modular terminal block					
XG1	1	Phoenix Contact	3273376	Distribution block, PTFIX 6/18X2,5 BU					
XG2	1	Phoenix Contact	3273376	Distribution block, PTFIX 6/18X2,5 BU					
XE1	1	Phoenix Contact	3274054	PTFIX Mounting rail adapter					
XG1	1	Phoenix Contact	3274054	PTFIX Mounting rail adapter					
XG2	1	Phoenix Contact	3274054	PTFIX Mounting rail adapter					
ENC1	1	Rittal	1060000	Compact enclosure AX, MIld Steel, 600x600x210mm					
UB8	1	Rittal	2508020	Wall mounting bracket					
UB11	1	Rittal	2508020	Wall mounting bracket					
UB9	1	Rittal	2508020	Wall mounting bracket					
UB10	1	Rittal	2508020	Wall mounting bracket					
05FC01	1	Siemens	5SL4206-7	CIRCUIT BREAKER 10KA 2POLE C6					
01FB01	1	Siemens	5SU1356-7KK06	RCBO elm					
05TB01	1	Siemens	6EP3333-3SB00-0AX0	SITOP PSU4200 1ph 24 V/5 A					
55KE02	1	Siemens	6ES7131-6BF00-0DA0	SIMATIC ET 200SP DI 8X24VDC HIGH SPEED					
55KE01	1	Siemens	6ES7155-6AU02-0BN0	ET 200SP, IM155-6PN ST					
55KE01	1	Siemens	6ES7193-6AR00-0AA0	ET 200SP, BA 2XRJ45					
55KE02	1	Siemens	6ES7193-6BP20-0DA0	SIMATIC ET 200SP BU type A0 BU15-P16+A10+2D					
55KE02	1	Siemens	6ES7193-6CP71-2AA0	10 COLOR IDENTIFICATION LABELS CC71					
01SF01	1	Socomec	14070520	200MM SHAFT SIRCO M					
01SF01	1	Socomec	14731111	Blue Black Handle					
01SF01	1	Socomec	22003000	SIRCO M and MV 16A 3 Pole Isolator M1					
01SF01	1	Socomec	22943005	M1 3-Pole Shroud					

Rev:	Description:	Drawn by:	Apprvd by:	Date:

AJS CONTROL & AUTOMATION
Innovation House
6 Cibus Way
Holbeach, PE12 7FH
Phone: 01406 424954
Email: info@ajsspalding.co.uk

Site: EUROPE SNACKS STEVENAGE
Client: ENERTHERM ENGINEERING
Address: ALLIA FUTURE BUSINESS PARK PUFC PE2 8AN

Project: STEVENAGE WATER FLOW METER
Panel Title: WATER METER DATA COLLECTION PANEL
Panel ID: ENC03
Drawing type: Parts list
Description: Parts List

Job / Drawing No:	Panel Ref:	Sheet:	Revision:
CA-251836	03	D1	

Page: &EAA+ENC03/D1 **Next:** E1

Terminal diagram

+ENC03-XD1

Internal targets | **External targets**

Drawing Ref.	Cable type	Cable tag	Core	Device Tag/Term	Wire No	Wire/saddle jumpers			Terminal Part No	Level	Wire No	Device Tag/Term	Cable tag	Core	Cable type
&EFS/01.3D			GNYE	BACKPLATE	PE		'	1	3212131	0	PE		-01WD01	GNYE	SWA 3x1.5 mm²
				-XE1:a	PE										

Rev:	Description:	Drawn by:	Apprvd by:	Date:

AJS CONTROL & AUTOMATION

Innovation House
6 Cibus Way
Holbeach, PE12 7FH
Phone: 01406 424954
Email: info@ajsspalding.co.uk

Site: EUROPE SNACKS STEVENAGE
Client: ENERTHERM ENGINEERING
Address: ALLIA FUTURE BUSINESS PARK PUFC PE2 8AN

Project: STEVENAGE WATER FLOW METER
Panel Title: WATER METER DATA COLLECTION PANEL
Panel ID: ENC03
Drawing type: Terminal diagram
Description: Terminal Diagram

Job / Drawing No:	Panel Ref:	Sheet:	Revision:
CA-251836	03	E1	

Page: &EAA+ENC03/E1 **Next:** E2

Terminal diagram

+ENC03-XD4

Internal targets

Drawing Ref.	Cable type	Cable tag	Core	Device Tag/Term	Wire No	Wire/saddle jumpers		
&EFS/70.3E			BU	-55KE02:1	037001		'	1
&EFS/70.4E			BU	-55KE02:9	037002		'	2
&EFS/70.5E				PE			'	3

External targets

Terminal Part No	Level	Wire No	Device Tag/Term	Cable tag	Core	Cable type
3209510	0	037001	70MD01-A-+	-70WD01	1	YY 3x0.75 mm²
3209510	0	037002	70MD01-A-COM	-70WD01	2	YY 3x0.75 mm²
3209536	0	PE	70MD01-A-PE	-70WD01	GNYE	YY 3x0.75 mm²

Rev:	Description:	Drawn by:	Apprvd by:	Date:

AJS CONTROL & AUTOMATION
Innovation House
6 Cibus Way
Holbeach, PE12 7FH
Phone: 01406 424954
Email: info@ajsspalding.co.uk

Site: EUROPE SNACKS STEVENAGE
Client: ENERTHERM ENGINEERING
Address: ALLIA FUTURE BUSINESS PARK PUFC PE2 8AN

Project: STEVENAGE WATER FLOW METER
Panel Title: WATER METER DATA COLLECTION PANEL
Panel ID: ENC03
Drawing type: Terminal diagram
Description: Terminal Diagram

Job / Drawing No: CA-251836
Panel Ref: 03
Sheet: E2
Revision:

Page: &EAA+ENC03/E2 **Next:** &EED/01

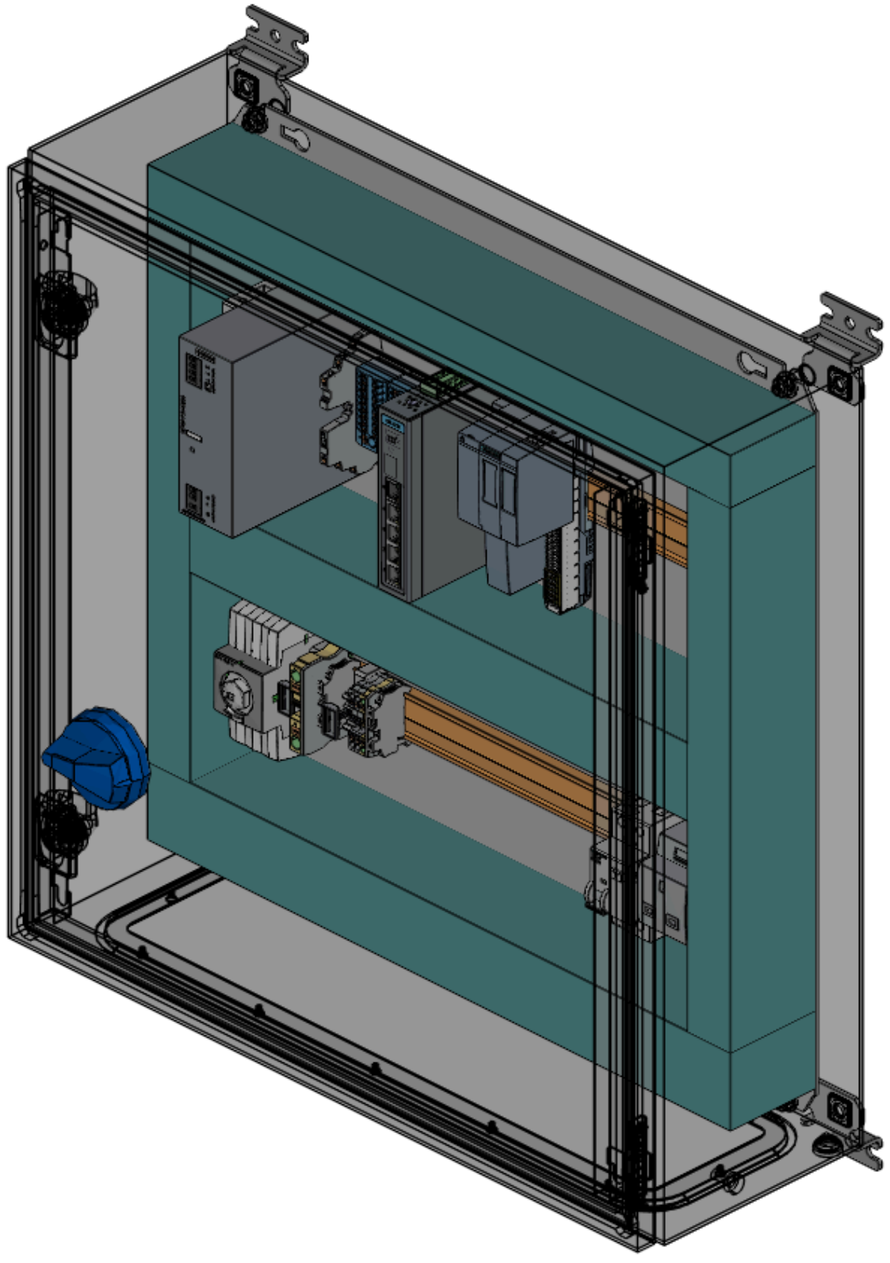

3D Model

Rev:	Description:	Drawn by:	Apprvd by:	Date:

AJS CONTROL & AUTOMATION

Innovation House
6 Cibus Way
Holbeach, PE12 7FH
Phone: 01406 424954
Email: info@ajsspalding.co.uk

Site: EUROPE SNACKS STEVENAGE
Client: ENERTHERM ENGINEERING
Address: ALLIA FUTURE BUSINESS PARK PUFC PE2 8AN

Project: STEVENAGE WATER FLOW METER
Panel Title: WATER METER DATA COLLECTION PANEL
Panel ID: ENC03
Drawing type: Model view
Description: 3D Model

Job / Drawing No:	Panel Ref:	Sheet:	Revision:
CA-251836	03	01	

Page: &EED+ENC03/01 **Next:** 02

Door Layout

Rev:	Description:	Drawn by:	Apprvd by:	Date:

AJS CONTROL & AUTOMATION
Innovation House
6 Cibus Way
Holbeach, PE12 7FH
Phone: 01406 424954
Email: info@ajsspalding.co.uk

Site: EUROPE SNACKS STEVENAGE
Client: ENERTHERM ENGINEERING
Address: ALLIA FUTURE BUSINESS PARK PUFC PE2 8AN

Project: STEVENAGE WATER FLOW METER
Panel Title: WATER METER DATA COLLECTION PANEL
Panel ID: ENC03
Drawing type: Model view
Description: Door Layout

Job / Drawing No:	Panel Ref:	Sheet:	Revision:
CA-251836	03	02	

Page: &EED+ENC03/02 **Next:** 03

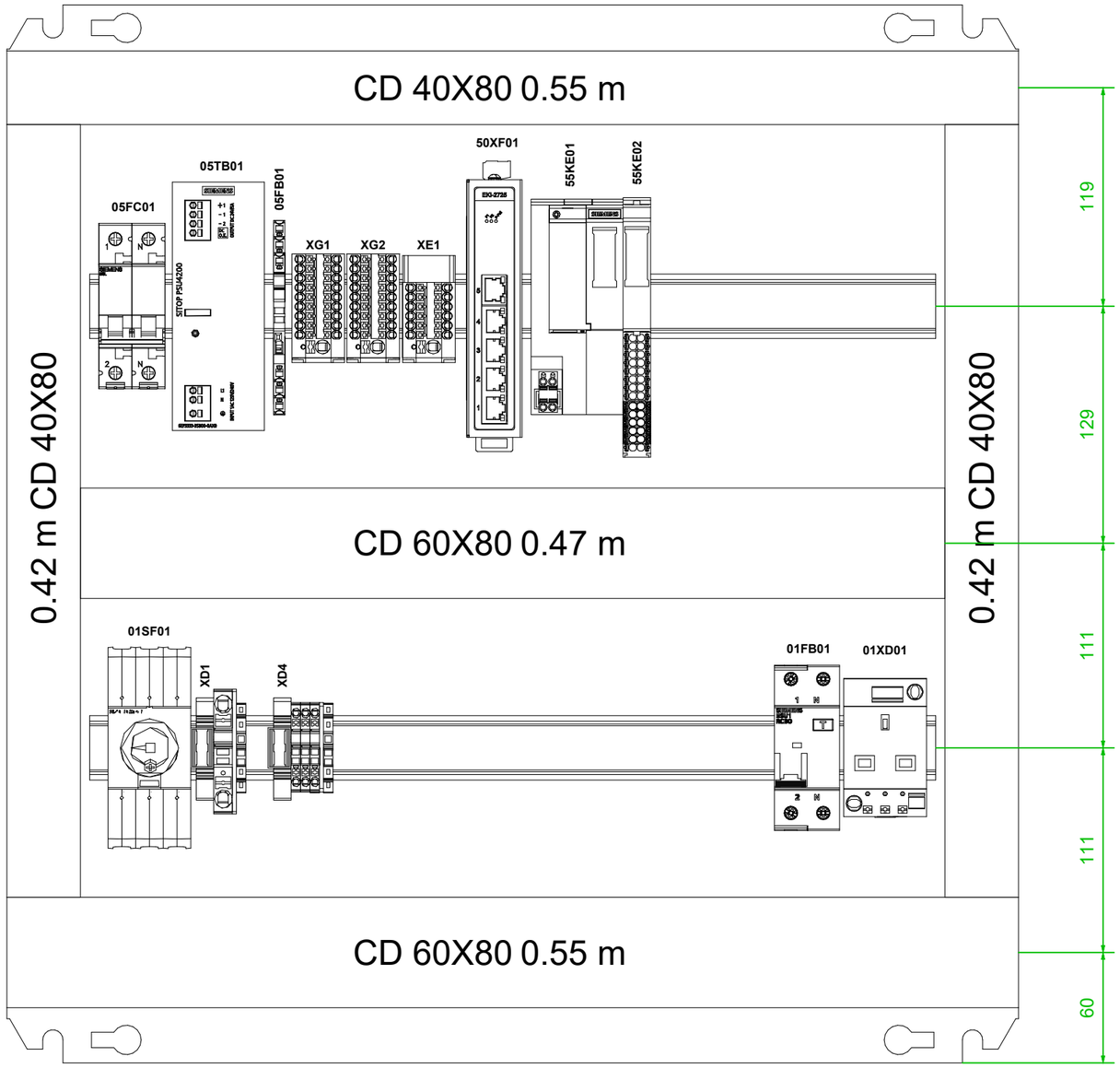

Back Plate

Rev:	Description:	Drawn by:	Apprvd by:	Date:

AJS CONTROL & AUTOMATION

Innovation House
6 Cibus Way
Holbeach, PE12 7FH
Phone: 01406 424954
Email: info@ajsspalding.co.uk

Site: EUROPE SNACKS STEVENAGE
Client: ENERTHERM ENGINEERING
Address: ALLIA FUTURE BUSINESS PARK PUFC PE2 8AN

Project: STEVENAGE WATER FLOW METER
Panel Title: WATER METER DATA COLLECTION PANEL
Panel ID: ENC03
Drawing type: Model view
Description: Back Plate View

Job / Drawing No:	Panel Ref:	Sheet:	Revision:
CA-251836	03	03	

Page: &EED+ENC03/03 **Next:** 05

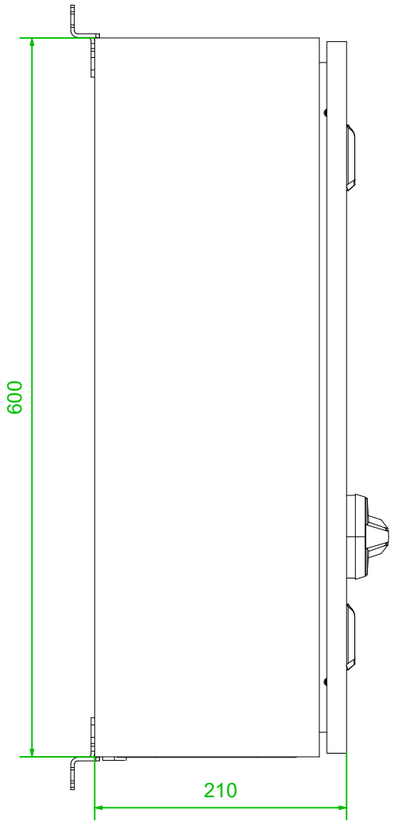

LEFT VIEW

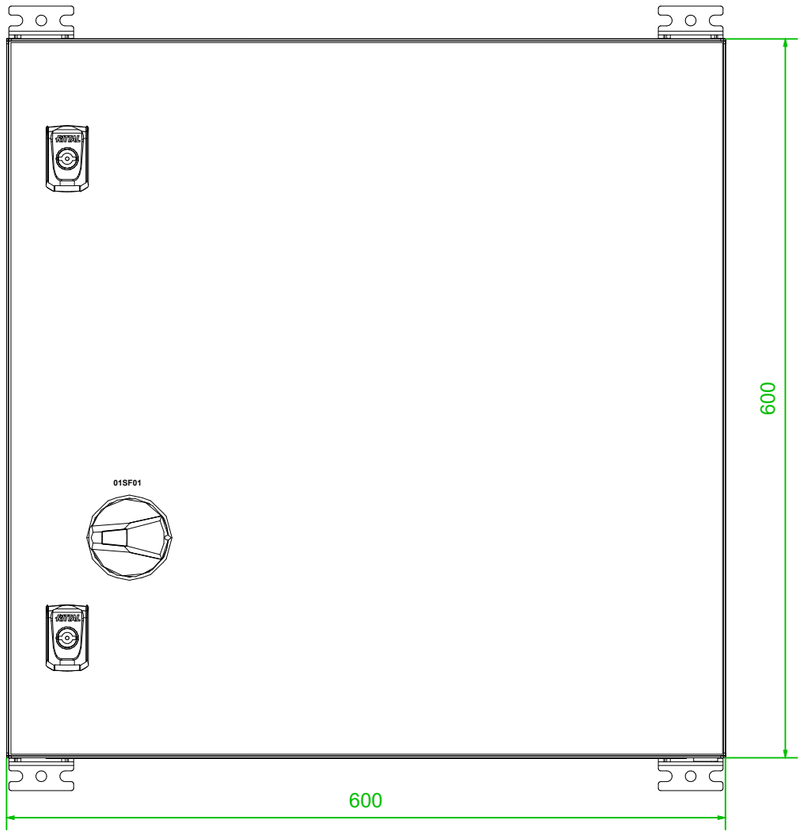

FRONT VIEW

Rev:	Description:	Drawn by:	Apprvd by:	Date:

AJS CONTROL & AUTOMATION
Innovation House
6 Cibus Way
Holbeach, PE12 7FH
Phone: 01406 424954
Email: info@ajsspalding.co.uk

Site: EUROPE SNACKS STEVENAGE
Client: ENERTHERM ENGINEERING
Address: ALLIA FUTURE BUSINESS PARK PUFC PE2 8AN

Project: STEVENAGE WATER FLOW METER
Panel Title: WATER METER DATA COLLECTION PANEL
Panel ID: ENC03
Drawing type: Model view
Description: LeftFront view

Job / Drawing No:	Panel Ref:	Sheet:	Revision:
CA-251836	03	05	

Page: &EED+ENC03/05 **Next:** &EFS/01

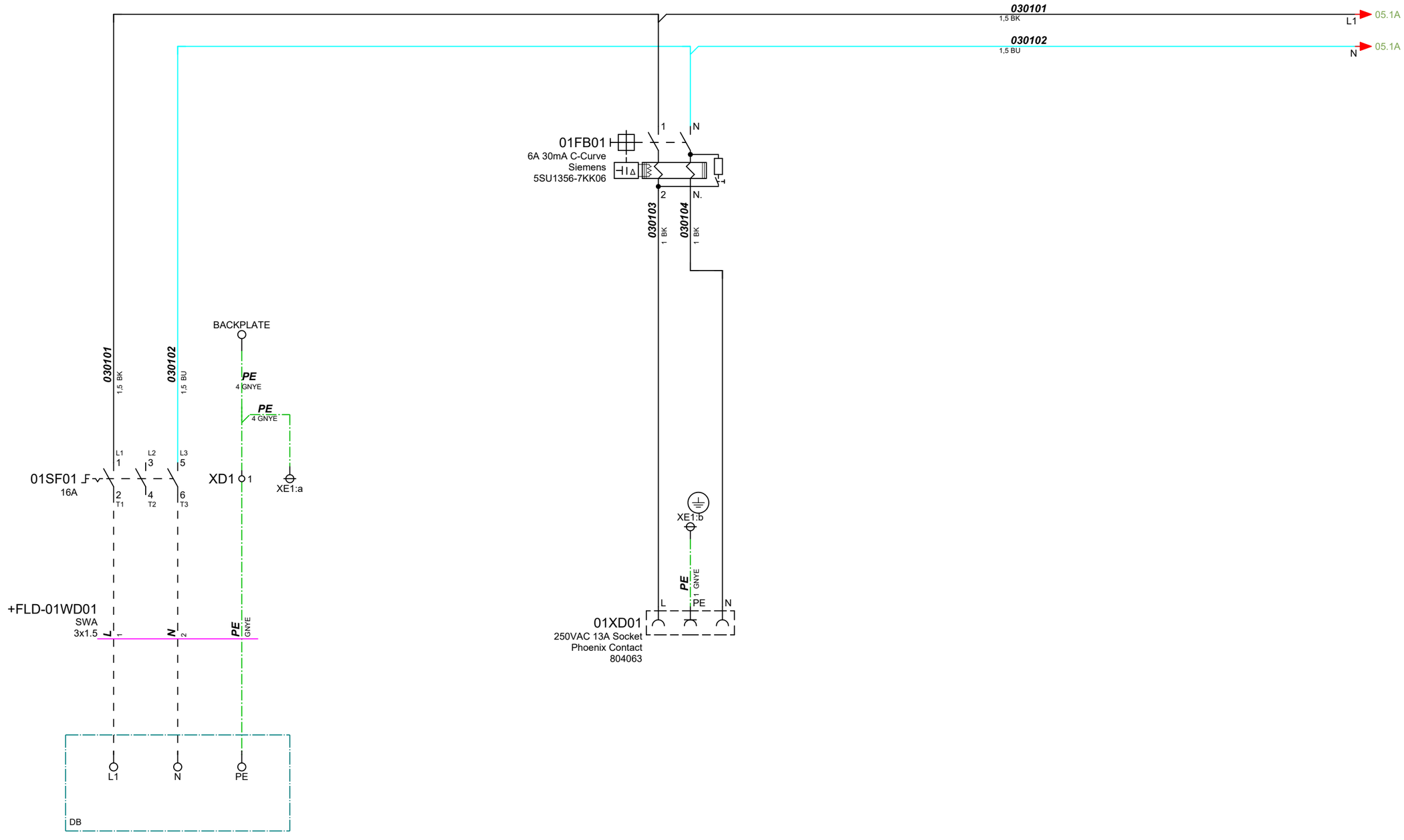

Rev:	Description:	Drawn by:	Apprvd by:	Date:

AJS CONTROL & AUTOMATION
Innovation House
6 Cibus Way
Holbeach, PE12 7FH
Phone: 01406 424954
Email: info@ajsspalding.co.uk

Site: EUROPE SNACKS STEVENAGE
Client: ENERTHERM ENGINEERING
Address: ALLIA FUTURE BUSINESS PARK PUFC PE2 8AN

Project: STEVENAGE WATER FLOW METER
Panel Title: WATER METER DATA COLLECTION PANEL
Panel ID: ENC03
Drawing type: Schematic multi-line
Description: INCOMMING SUPPLY

Job / Drawing No:	Panel Ref:	Sheet:	Revision:
CA-251836	03	01	

Page: &EFS+ENC03/01 **Next:** 05

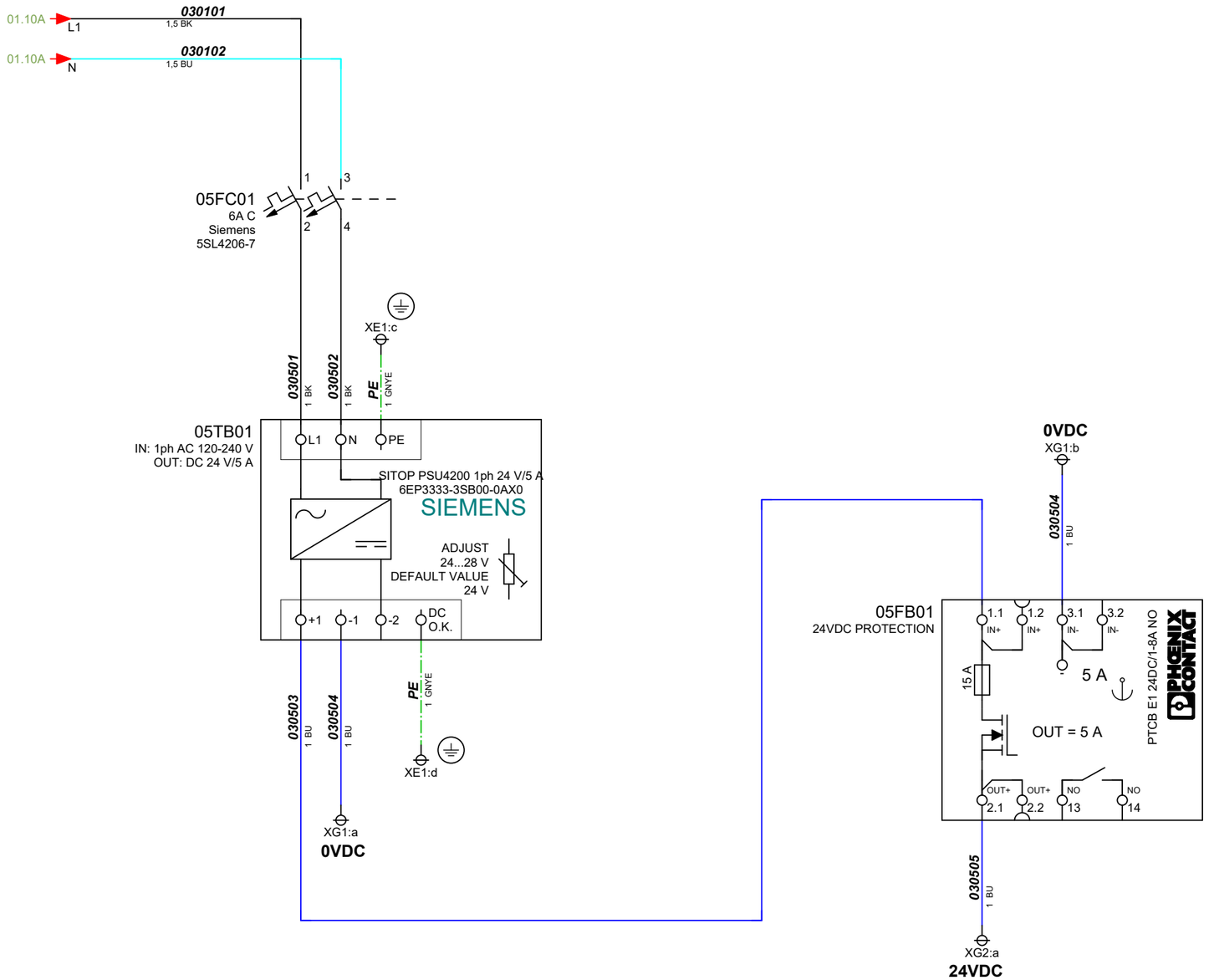

Rev:	Description:	Drawn by:	Apprvd by:	Date:

AJS CONTROL & AUTOMATION

Innovation House
6 Cibus Way
Holbeach, PE12 7FH
Phone: 01406 424954
Email: info@ajsspalding.co.uk

Site: EUROPE SNACKS STEVENAGE
Client: ENERTHERM ENGINEERING
Address: ALLIA FUTURE BUSINESS PARK PUFC PE2 8AN

Project: STEVENAGE WATER FLOW METER
Panel Title: WATER METER DATA COLLECTION PANEL
Panel ID: ENC03
Drawing type: Schematic multi-line
Description: 24V PSU

Job / Drawing No:	Panel Ref:	Sheet:	Revision:
CA-251836	03	05	

Page: &EFS+ENC03/05 **Next:** 50

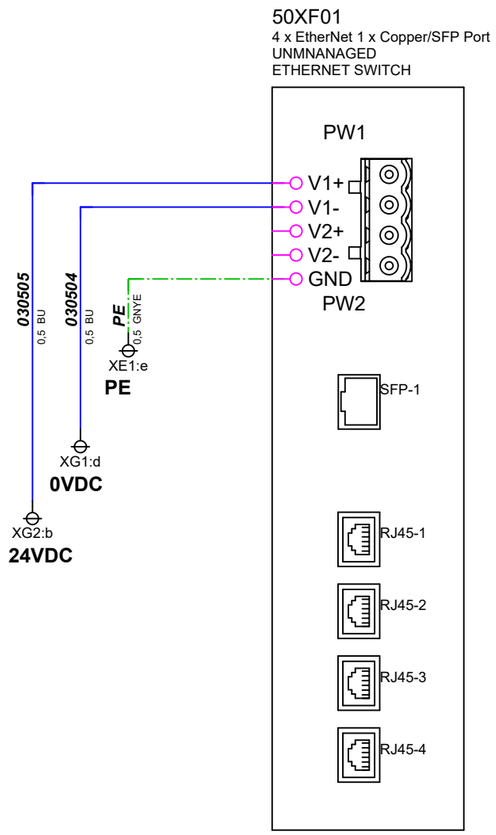

Rev:	Description:	Drawn by:	Apprvd by:	Date:

AJS CONTROL & AUTOMATION
Innovation House
6 Cibus Way
Holbeach, PE12 7FH
Phone: 01406 424954
Email: info@ajsspalding.co.uk

Site: EUROPE SNACKS STEVENAGE
Client: ENERTHERM ENGINEERING
Address: ALLIA FUTURE BUSINESS PARK PUFC PE2 8AN

Project: STEVENAGE WATER FLOW METER
Panel Title: WATER METER DATA COLLECTION PANEL
Panel ID: ENC03
Drawing type: Schematic multi-line
Description: NETWORK SWITCH

Job / Drawing No:	Panel Ref:	Sheet:	Revision:
CA-251836	03	50	

Page: &EFS+ENC03/50 **Next:** 55

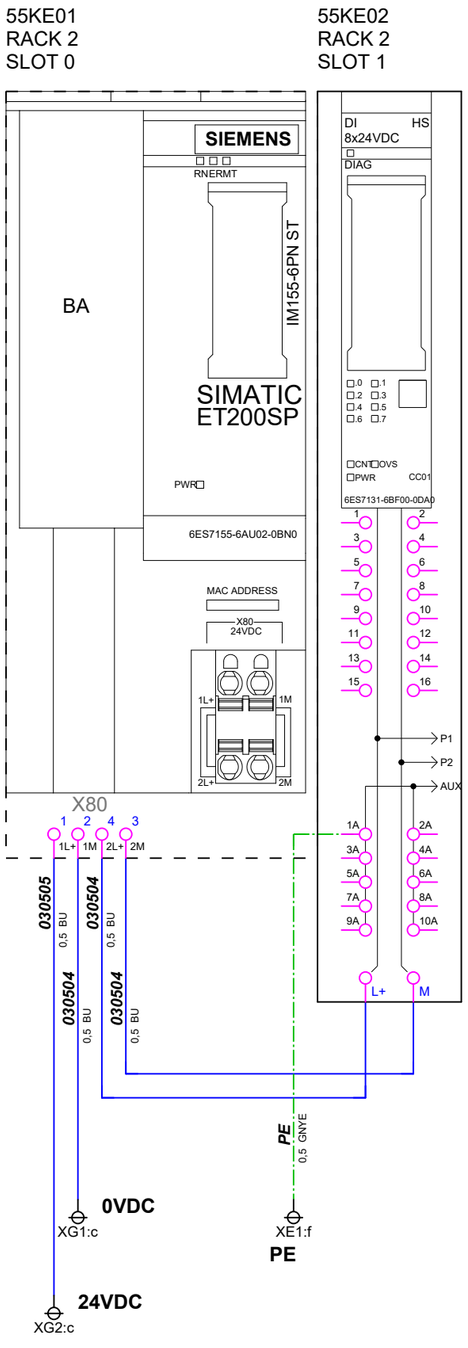

Rev:	Description:	Drawn by:	Apprvd by:	Date:

AJS CONTROL & AUTOMATION
Innovation House
6 Cibus Way
Holbeach, PE12 7FH
Phone: 01406 424954
Email: info@ajsspalding.co.uk

Site: EUROPE SNACKS STEVENAGE
Client: ENERTHERM ENGINEERING
Address: ALLIA FUTURE BUSINESS PARK PUFC PE2 8AN

Project: STEVENAGE WATER FLOW METER
Panel Title: WATER METER DATA COLLECTION PANEL
Panel ID: ENC03
Drawing type: Schematic multi-line
Description: PLC

Job / Drawing No:	Panel Ref:	Sheet:	Revision:
CA-251836	03	55	

Page: &EFS+ENC03/55 **Next:** 70

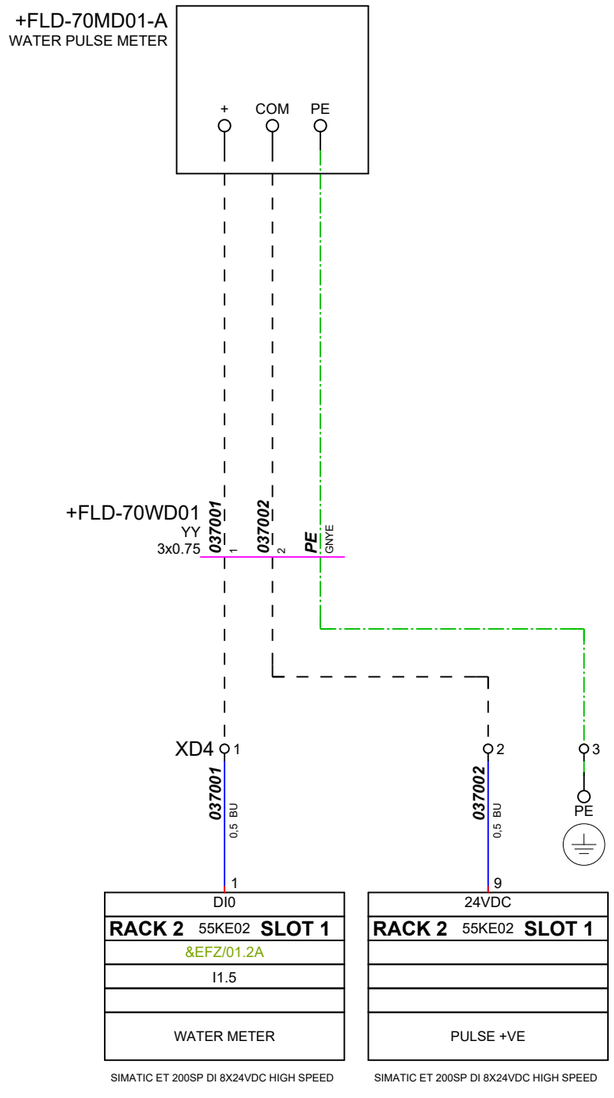

Rev:	Description:	Drawn by:	Apprvd by:	Date:

AJS CONTROL & AUTOMATION
Innovation House
6 Cibus Way
Holbeach, PE12 7FH
Phone: 01406 424954
Email: info@ajsspalding.co.uk

Site: EUROPE SNACKS STEVENAGE
Client: ENERTHERM ENGINEERING
Address: ALLIA FUTURE BUSINESS PARK PUFC PE2 8AN

Project: STEVENAGE WATER FLOW METER
Panel Title: WATER METER DATA COLLECTION PANEL
Panel ID: ENC03
Drawing type: Schematic multi-line
Description: WATER METER

Job / Drawing No:	Panel Ref:	Sheet:	Revision:
CA-251836	03	70	

Page: &EFS+ENC03/70 **Next:** 100

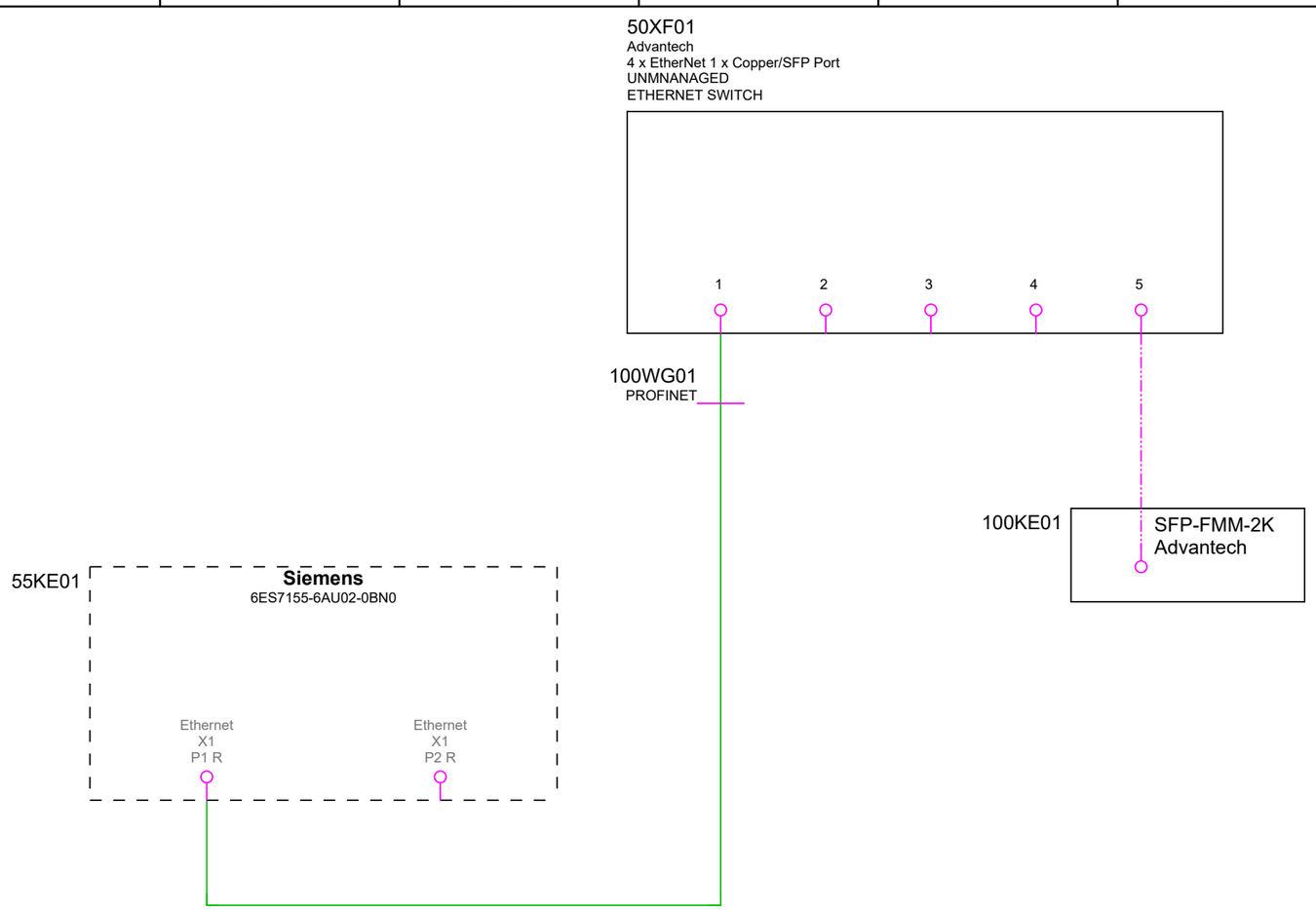

Rev:	Description:	Drawn by:	Apprvd by:	Date:

AJS CONTROL & AUTOMATION
Innovation House
6 Cibus Way
Holbeach, PE12 7FH
Phone: 01406 424954
Email: info@ajsspalding.co.uk

Site: EUROPE SNACKS STEVENAGE
Client: ENERTHERM ENGINEERING
Address: ALLIA FUTURE BUSINESS PARK PUFC PE2 8AN

Project: STEVENAGE WATER FLOW METER
Panel Title: WATER METER DATA COLLECTION PANEL
Panel ID: ENC03
Drawing type: Schematic single-line
Description: ENC03 PROFINET NETWORK

Job / Drawing No:	Panel Ref:	Sheet:	Revision:
CA-251836	03	100	

Page: &EFS+ENC03/100 **Next:** &EFZ/01

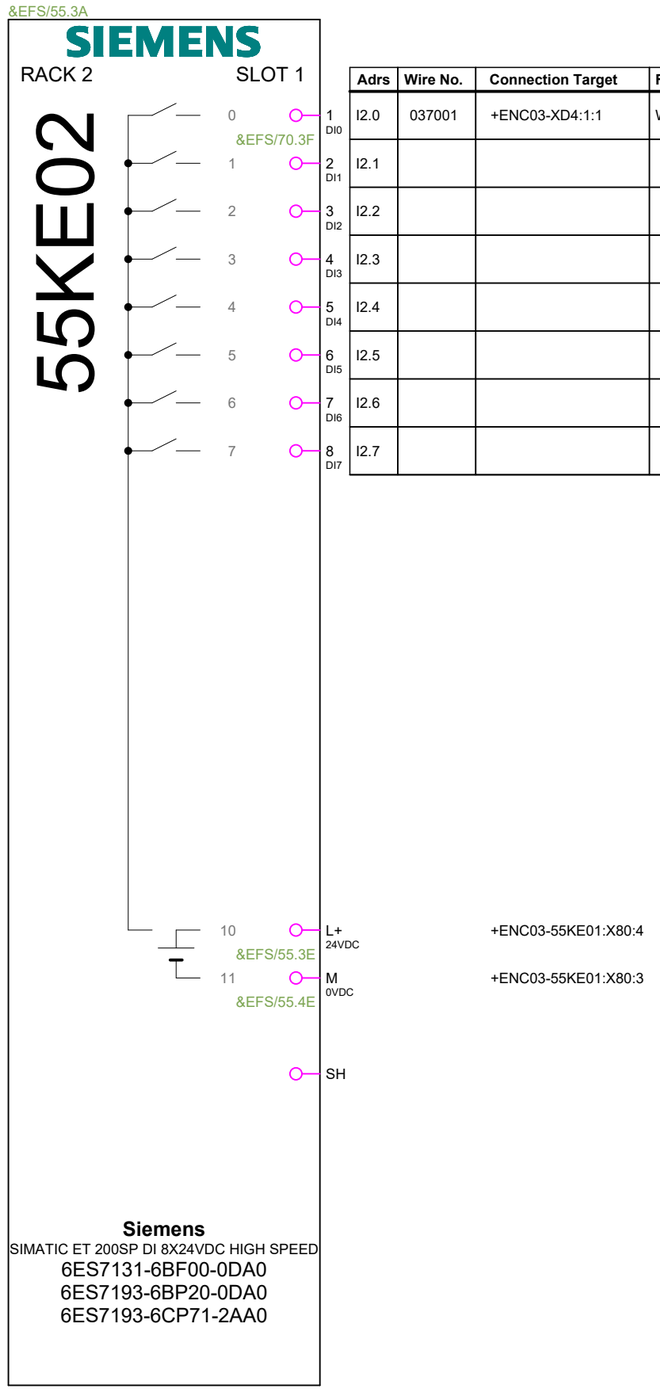

Adrs	Wire No.	Connection Target	Function
I2.0	037001	+ENC03-XD4:1:1	WATER METER
I2.1			
I2.2			
I2.3			
I2.4			
I2.5			
I2.6			
I2.7			

+ENC03-55KE01:X80:4

+ENC03-55KE01:X80:3

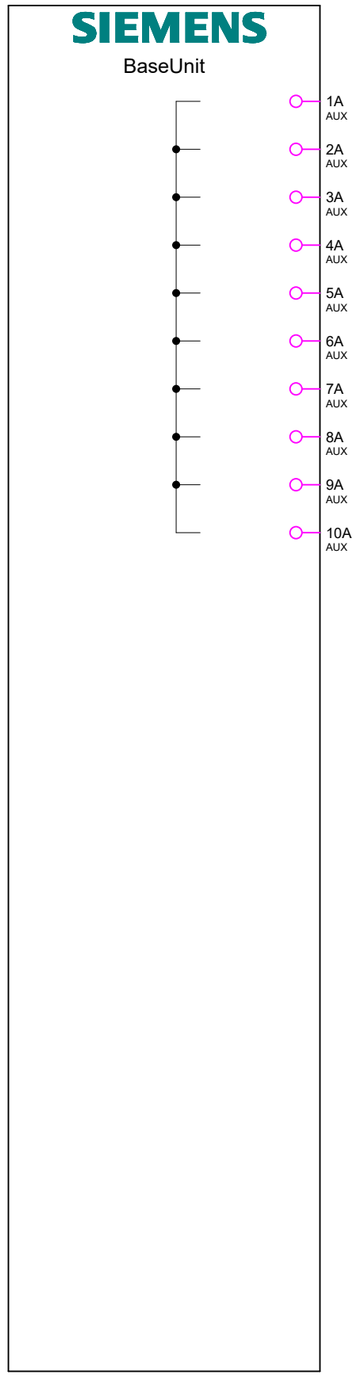

Rev:	Description:	Drawn by:	Apprvd by:	Date:

AJS CONTROL & AUTOMATION
Innovation House
6 Cibus Way
Holbeach, PE12 7FH
Phone: 01406 424954
Email: info@ajsspalding.co.uk

Site: EUROPE SNACKS STEVENAGE
Client: ENERTHERM ENGINEERING
Address: ALLIA FUTURE BUSINESS PARK PUFC PE2 8AN

Project: STEVENAGE WATER FLOW METER
Panel Title: WATER METER DATA COLLECTION PANEL
Panel ID: ENC03
Drawing type: Overview
Description: RACK 2 SLOT 1

Job / Drawing No:	Panel Ref:	Sheet:	Revision:
CA-251836	03	01	

Page: &EFZ+ENC03/01 **Next:** &EMB+/01